BUTTERFLY VALVE DOUBLE FLANGED TYPE BARE SHAFT

Information provided as an indication and subject to possible modification.Colours and details can be different then shown in data sheets or pictures.
Merxtrade BV has no liability for any damages by use off any information displayed on these pages.

DOUBLE FLANGED TYPE BARE SHAFT DN40 - DN150

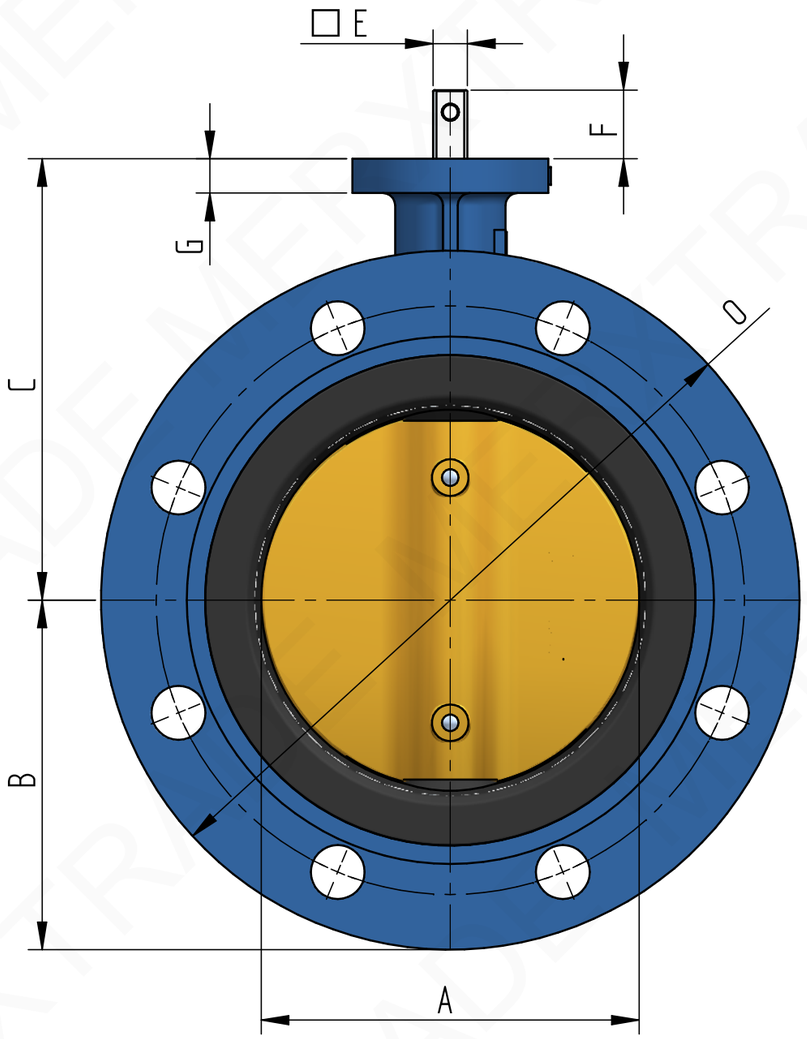

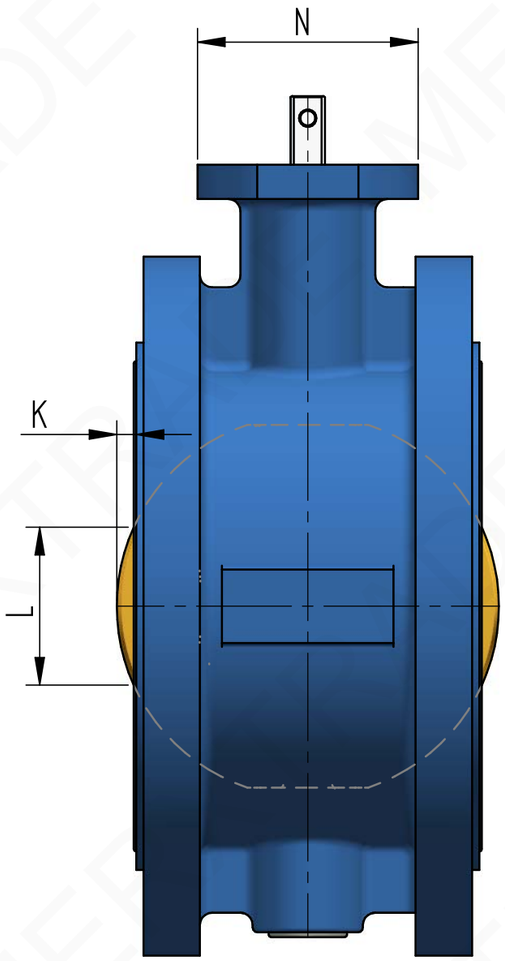

Size DN40 to DN150, Design EN593
Face to face acc. EN558.1 series 13
Flange connections: DIN PN6-10-16-25
ANSI B 16.5 Cl. 150#, JIS B 2211 5K, 10K
Temperature -40/+250°C
Various pressure ratings up to 25 bar
Top flange according ISO 5211
Vacuum to 1*10-3 0.2 Torr absolute

Standard available materials :			
BODY	DISC	SHAFT	SEAT
EN-JS1030	BS 1400 AB2	SS 1.4122	NBR -15°C / +80°C
A216 WCB	EN-JS1030	SS 431	EPDM -30°C / +110°C
SS 1.4408	SS 1.4408	SS 1.4462	Viton -0°C / +200°C
BS 1400 AB2	SD 2507	SD F53	Silicone -20°C / +250°C

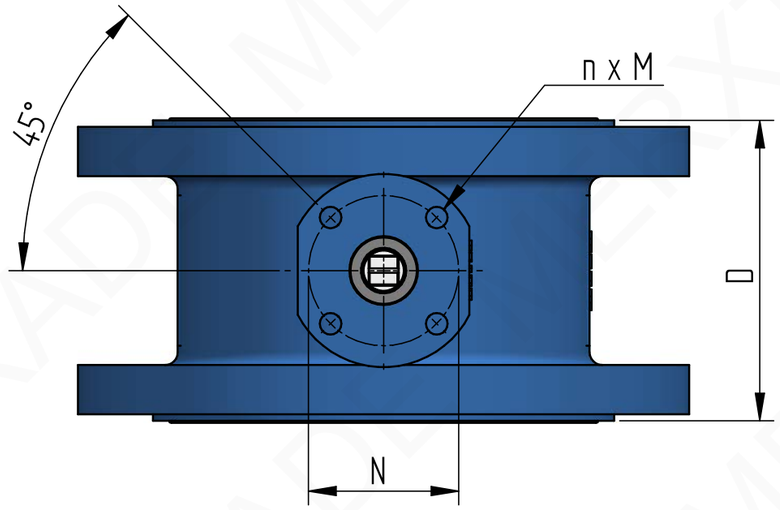

Size	A	B	C	D	E	F	G	Topflange				K	L	O	Weight ± Kg
								ISO 5211	H	N	n x M				
DN 40	41	75.0	113	106	[ ] 11	26	12	F07	ø90	ø70	4 x ø10	--	--	150	5.5
DN 50	52	82.5	118	108	[ ] 11	26	12	F07	ø90	ø70	4 x ø10	--	--	165	7.5
DN 65	63	92.5	126	112	[ ] 11	26	13	F07	ø90	ø70	4 x ø10	--	--	185	9.0
DN 80	78	100.0	133	114	[ ] 11	26	14	F07	ø90	ø70	4 x ø10	--	--	200	10.7
DN 100	103	110.0	147	127	[ ] 11	26	14	F07	ø90	ø70	4 x ø10	--	--	220	13.6
DN 125	125	125.0	160	140	[ ] 14	28	14	F07	ø90	ø70	4 x ø10	--	--	250	19.3
DN 150	155	142.5	180	140	[ ] 14	28	14	F07	ø90	ø70	4 x ø10	8	69	285	22.7

Information provided as an indication and subject to possible modification.Colours and details can be different then shown in data sheets or pictures.
Merxtrade BV has no liability for any damages by use off any information displayed on these pages.

DOUBLE FLANGED TYPE BARE SHAFT DN200 - DN400

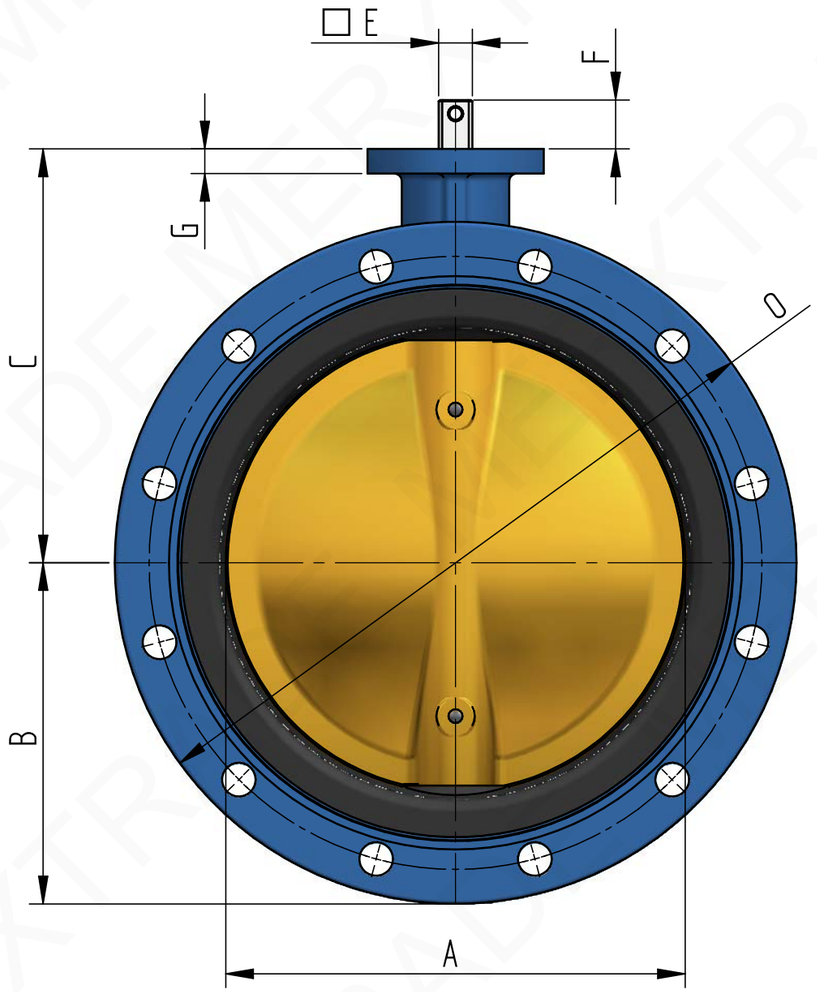

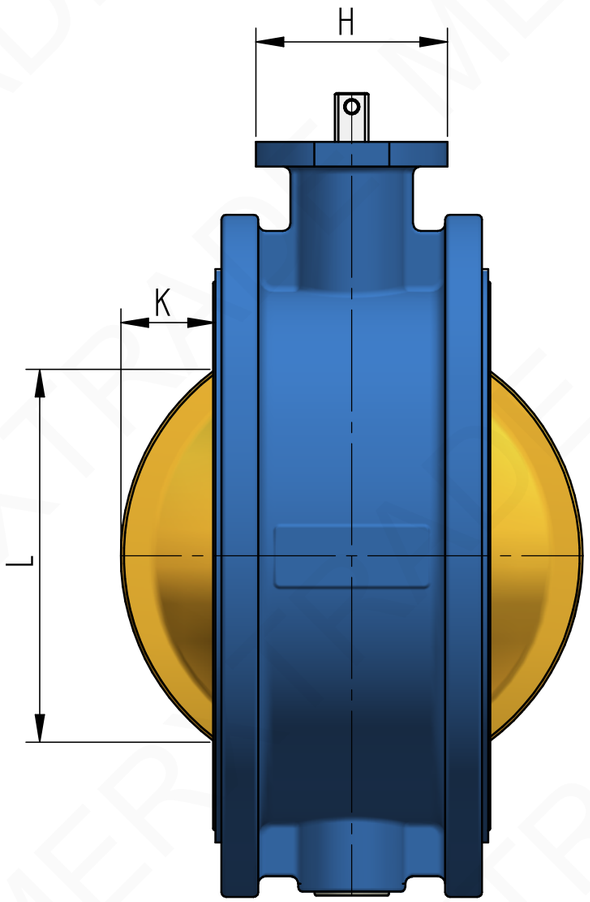

Size DN200 to DN400, Design EN593
Face to face acc. EN558.1 series 13
Flange connections: DIN PN6-10-16-25
ANSI B 16.5 Cl. 150#, JIS B 2211 5K, 10K
Temperature -40/+250°C
Various pressure ratings up to 25 bar
Top flange according ISO 5211
Vacuum to 1*10-3 0.2 Torr absolute

Standard available materials :			
BODY	DISC	SHAFT	SEAT
EN-JS1030	BS 1400 AB2	SS 1.4122	NBR -15°C / +80°C
A216 WCB	EN-JS1030	SS 431	EPDM -30°C / +110°C
SS 1.4408	SS 1.4408	SS 1.4462	Viton -0°C / +200°C
BS 1400 AB2	SD 2507	SD F53	Silicone -20°C / +250°C

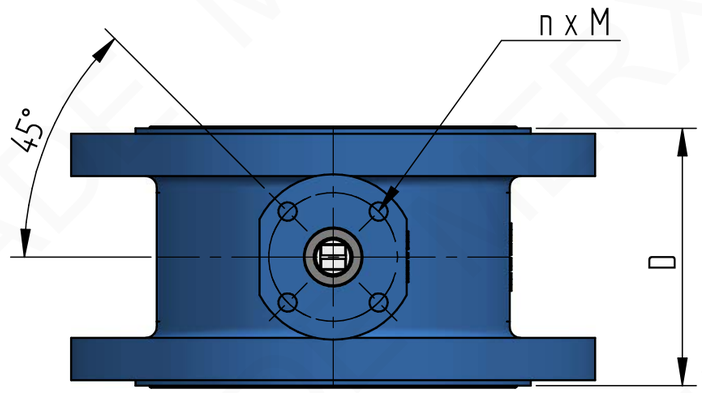

Size	A	B	C	D	E	F	G	Topflange				K	L	O	Weight ± Kg
								ISO 5211	H	N	n x M				
DN 200	201	170.0	204	152	[ ] 17	30	14	F07	ø90	ø70	4 x ø10	25	134	340	32.4
DN 250	249	197.5	245	165	[ ] 22	30	15	F10	ø125	ø102	4 x ø12	43	189	395	49.4
DN 300	302	222.5	270	178	[ ] 22	32	16	F10	ø125	ø102	4 x ø12	62	244	445	58.6
DN 350	340	252.5	315	190	[ ] 27	29	20	F12	ø175	ø125	4 x ø14	72	275	505	89.2
DN 400	397	282.5	350	216	[ ] 27	29	20	F12	ø175	ø125	4 x ø14	87	325	565	109.3

Information provided as an indication and subject to possible modification.Colours and details can be different then shown in data sheets or pictures.
Merxtrade BV has no liability for any damages by use off any information displayed on these pages.

DOUBLE FLANGED TYPE BARE SHAFT DN450 - DN600

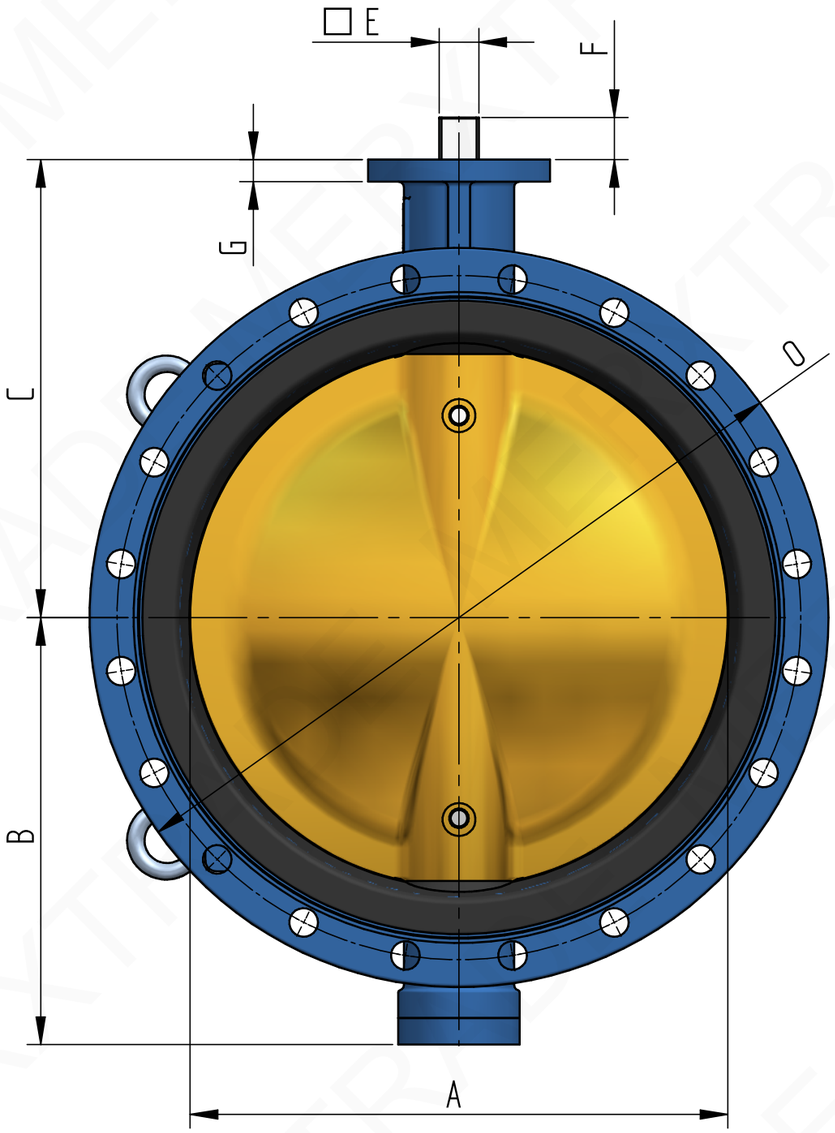

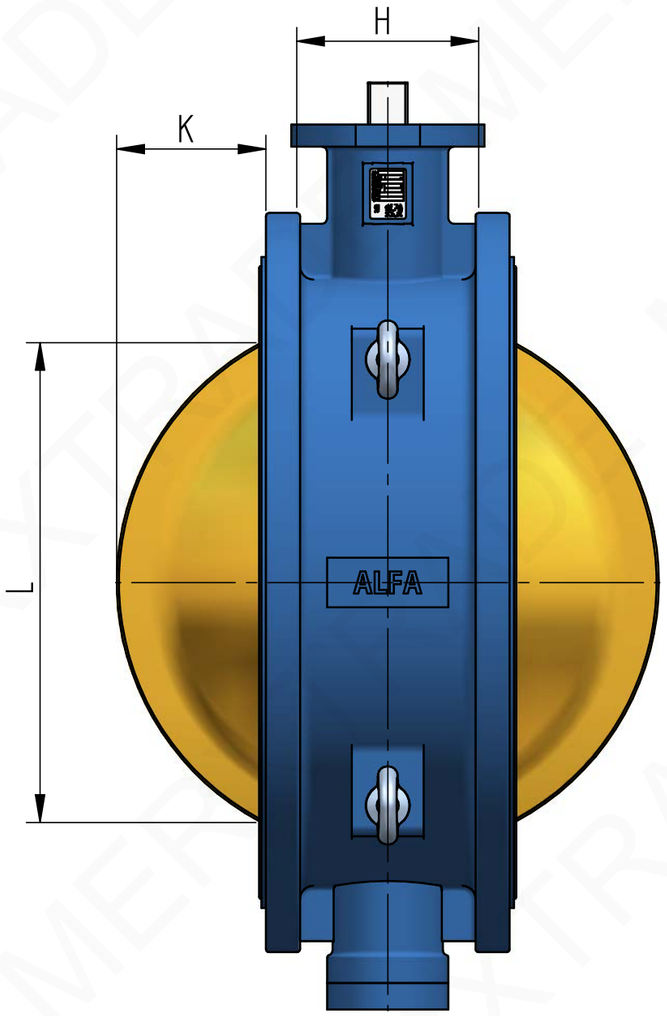

Size DN450 to DN600, Design EN593
Face to face acc. EN558.1 series 13
Flange connections: DIN PN6-10-16-25
ANSI B 16.5 Cl. 150#, JIS B 2211 5K, 10K
Temperature -40/+250°C
Various pressure ratings up to 25 bar
Top flange according ISO 5211
Vacuum to 1*10-3 0.2 Torr absolute

Standard available materials :			
BODY	DISC	SHAFT	SEAT
EN-JS1030	BS 1400 AB2	SS 1.4122	NBR -15°C / +80°C
A216 WCB	EN-JS1030	SS 431	EPDM -30°C / +110°C
SS 1.4408	SS 1.4408	SS 1.4462	Viton -0°C / +200°C
BS 1400 AB2	SD 2507	SD F53	Silicone -20°C / +250°C

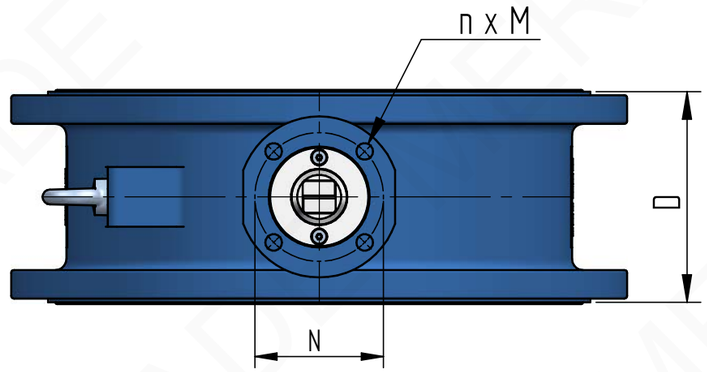

Size	A	B	C	D	E	F	G	Topflange				K	L	O	Weight ± Kg
								ISO 5211	H	N	n x M				
DN 450	438	353	375	222	[ ] 36	38	20	F14	ø175	ø140	4 x ø18	109	381	615	135
DN 500	489	387	415	229	[ ] 36	38	20	F14	ø175	ø140	4 x ø18	131	435	670	172
DN 600	590	453	562	267	[ ] 46	48	25	F16	ø210	ø165	4 x ø22	163	529	780	256

Information provided as an indication and subject to possible modification.Colours and details can be different then shown in data sheets or pictures.
Merxtrade BV has no liability for any damages by use off any information displayed on these pages.

DOUBLE FLANGED TYPE BARE SHAFT DN700 - DN1200

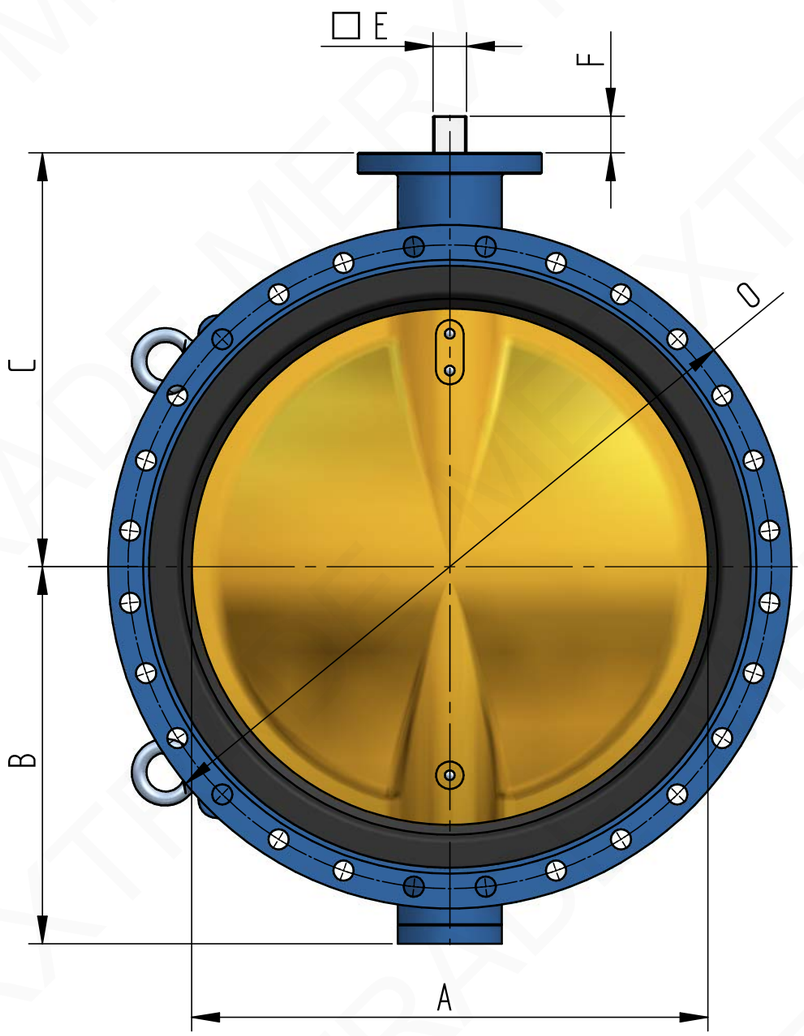

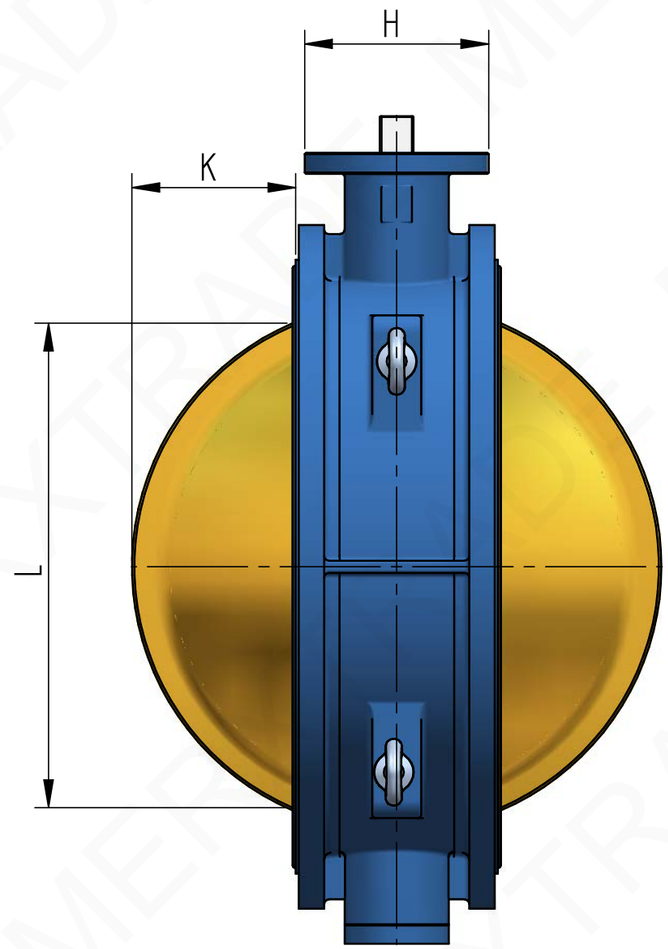

Size DN700 to DN1200, Design EN593
Face to face acc. EN558.1 series 13
Flange connections: DIN PN6-10-16-25
ANSI B 16.5 Cl. 150#, JIS B 2211 5K, 10K
Temperature -40/+250°C
Various pressure ratings up to 16 bar
Top flange according ISO 5211
Vacuum to 1*10-3 0.2 Torr absolute

Standard available materials :			
BODY	DISC	SHAFT	SEAT
EN-JS1030	BS 1400 AB2	SS 1.4122	NBR -15°C / +80°C
A216 WCB	EN-JS1030	SS 431	EPDM -30°C / +110°C
SS 1.4408	SS 1.4408	SS 1.4462	Viton -0°C / +200°C
BS 1400 AB2	SD 2507	SD F53	Silicone -20°C / +250°C

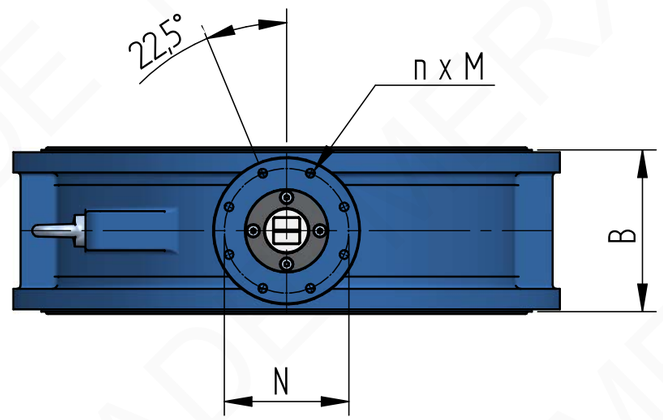

Size	A	B	C	D	E	F	G	Topflange				K	L	O	Weight ± Kg
								ISO 5211	H	N	n x M				
DN 700	692	491	560	292	[ ] 46	55	25	F16	ø175	ø140	4 x ø18	202	631	895	350
DN 800	792	550	620	318	[ ] 55	55	30	F25	ø300	ø254	8 x ø18	238	728	1055	540
DN 900	861	615	675	330	[ ] 55	60	30	F25	ø300	ø254	8 x ø18	267	799	1115	650
DN 1000	961	670	735	410	[ ] 55	60	30	F25	ø300	ø254	8 x ø18	277	873	1230	850
DN 1200	1156	788	917	470	[ ] 60	60	35	F30	ø350	ø298	8 x ø22	345	1059	1455	1375

Information provided as an indication and subject to possible modification.Colours and details can be different then shown in data sheets or pictures.
Merxtrade BV has no liability for any damages by use off any information displayed on these pages.